SOUTHERN KENTUCKY BUSINESS PARK
SANITARY SEWER EXTENSION TO LOTS 7 & 8

CORBIN, KY

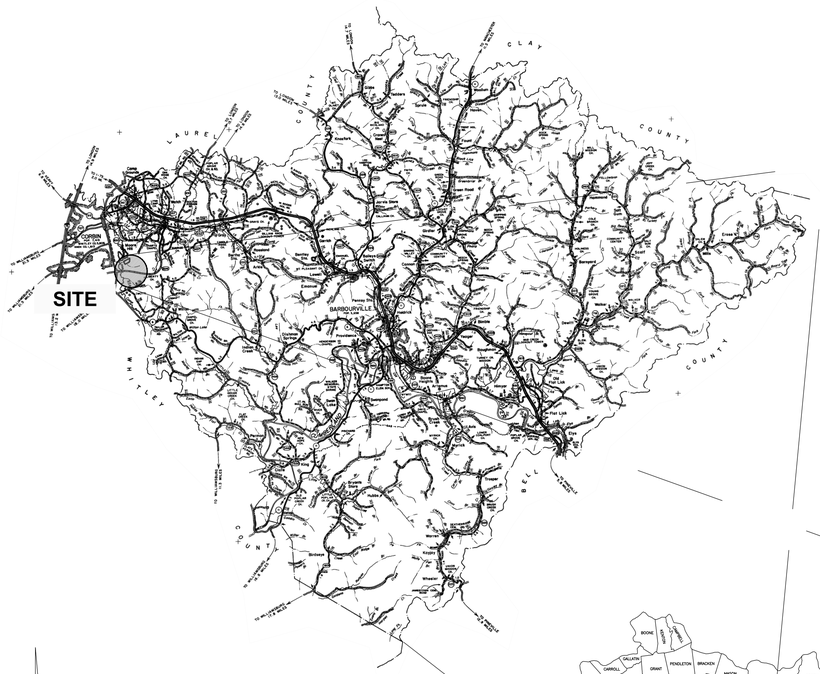

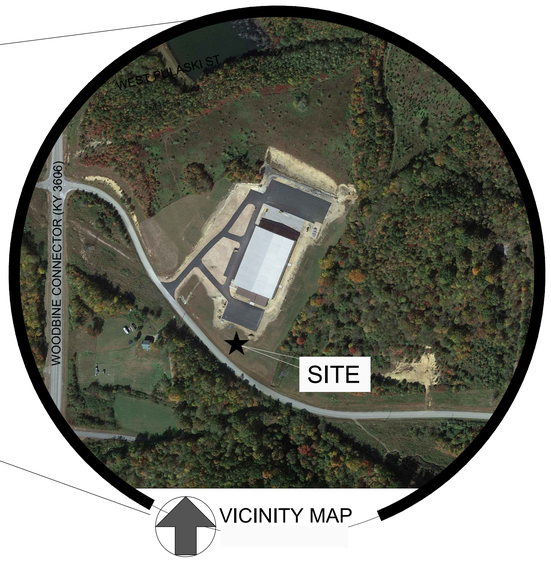

VICINITY MAP

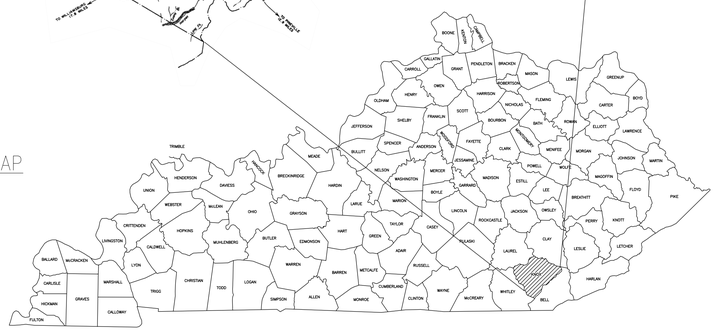

LOCATION MAP

Sheet Titles	INDEX	Sheet Nos.
COVER		
INDEX MAP AND GENERAL NOTES		I
SANITARY SEWER - PLAN & PROFILE		C-1
STANDARD SEWER DETAILS		SD-1, SD-2 & SD-3

ARC PROJECT NO: _____

AUGUST 2023

MSE OF KENTUCKY, INC.
Engineers
Architects
Planners

D. Scott Taylor
Digitally signed by D. Scott Taylor
Date: 2023.08.28 11:38:40 -04'00'

STATE OF KENTUCKY
D SCOTT TAYLOR
11400
LICENSED
PROFESSIONAL ENGINEER

8/28/2023

SET NO. _____

MSE PROJECT No. 2063-80

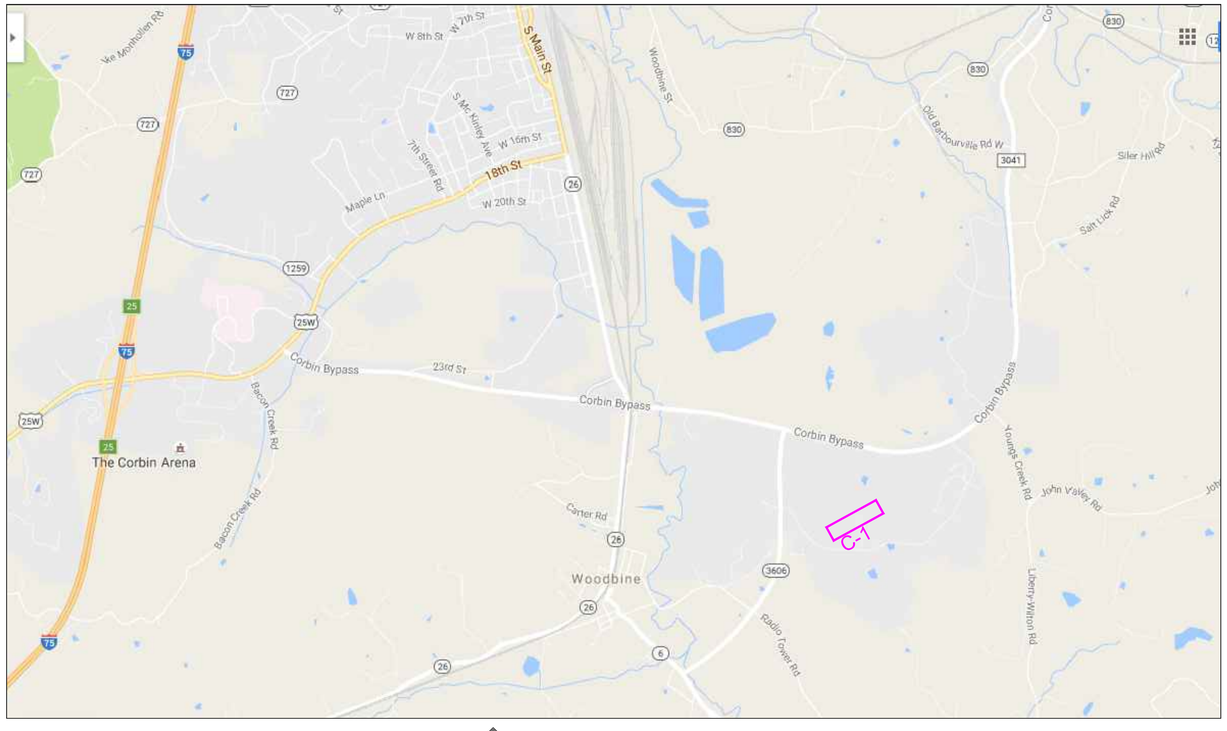

INDEX MAP

GENERAL NOTES

EXISTING GRADE ELEVATIONS SHOWN IN PROFILE AND CONTOURS SHOWN IN PLAN VIEW WERE COMPILED BY COMPUTER METHODS FROM AERIAL PHOTOGRAPHY.

CONTRACTOR IS TO PERFORM LAY-OUT AND PRODUCE CUT-SHEETS FOR VERIFICATION OF LINE DEPTHS AND MANHOLE QUANTITIES. CONTRACTOR SHALL UTILIZE CUT-SHEETS IN THE PREPARATION OF HIS AS-BUILT DRAWING TO ACCURATELY PORTRAY THE PROFILE. CUT-SHEETS WILL BE FIELD VERIFIED BY ENGINEER. CONTRACTOR SHALL, DETERMINE THE BOUNDS OF CONSTRUCTION EASEMENTS AND RIGHTS-OF-WAY AND CONFINE ALL CONSTRUCTION ACTIVITY TO THESE AREAS, PROVIDE CONSTRUCTION WARNING SIGNS, BARRICADES AND FLAGMEN AS NECESSARY. CONTRACTOR SHALL PREVENT SOIL EROSION, CONTROL SILT RUN-OFF, PROVIDE MULCH, SILT FENCES, STRAW BALES OR OTHER MEASURES AS NECESSARY. CONTRACTOR SHALL LOCATE ANY EXISTING UTILITIES.

WHERE EXISTING UTILITIES ARE SHOWN, LOCATIONS ARE APPROXIMATE. CONSULT WITH APPLICABLE UTILITY COMPANIES TO DETERMINE EXACT LOCATIONS OF MAINS AND SERVICE LINES PRIOR TO ANY EXCAVATION. CONTRACTOR SHALL BE RESPONSIBLE FOR PROTECTING PRIVATE PROPERTY. BORE ALL ASPHALT AND CONCRETE PAVEMENT UNLESS THE OWNER APPROVES OPEN CUTTING AND REPAIR. DO NOT CUT FENCES UNLESS THE OWNER APPROVES CUTTING AND REPAIR. PRESERVE TREES AND SHRUBS.

THE CONTRACTOR SHALL HAVE ON HAND AT THE JOB SITE 11¼, 22½, 45, AND 90 DEGREE BENDS TO ALLOW FOR THEIR USE WHERE THE ENGINEER REQUIRES INSTALLATION AS NECESSARY.

PIPE JOINT DEFLECTION IS NOT TO EXCEED MANUFACTURER'S ALLOWABLE LIMITS.

AT SOME LOCATIONS, THE CONTRACTOR MAY BE REQUIRED TO PROVIDE EXTRA COVER OVER LINE. COST OF EXTRA COVER IS TO BE INCLUDED IN UNIT PRICE BID FOR LINE INSTALLATION AND NO SEPARATE PAYMENT WILL BE MADE FOR SUCH EXTRA COVER. ALL SUCH LOCATIONS ARE SHOWN ON THE PLANS.

WATER AND SEWER SEPARATION REQUIREMENT

WATER AND SEWER PARALLEL CONSTRUCTION
ALL WATER AND SEWER FACILITIES SHALL BE SEPARATED BY A MINIMUM OF 10 FEET MEASURED AS THE SHORTEST DISTANCE BETWEEN CLOSEST POINTS. NO WATER MAIN MAY BE CONSTRUCTED WITHIN 10 FT OF A SEWER MAIN, FORCE MAIN, MANHOLE OR ANY OTHER APPURTENANCE EXCEPT FOR CROSSINGS SHOWN ON THE PLANS. CROSSING SHALL MEET THE FOLLOWING REQUIIREMENT.

WATER AND SEWER CROSSING
SEWERS CROSSING WATER MAINS SHALL BE LAID TO PROVIDE A MINIMUM VERTICAL DISTANCE OF 18 INCHES BETWEEN THE OUTSIDE OF THE WATER MAIN AND THE OUTSIDE OF THE SEWER. THIS SHALL BE THE CASE WHERE THE WATER MAIN IS EITHER ABOVE OR BELOW THE SEWER. THE CROSSING SHALL BE ARRANGED SO THAT THE SEWER JOINTS WILL BE EQUIDISTANT AND AS FAR AS POSSIBLE FROM THE WATER MAIN JOINTS. WHERE A WATER MAIN CROSSES UNDER A SEWER, ADEQUATE STRUCTURAL SUPPORT SHALL BE PROVIDED FOR THE SEWER TO MAINTAIN LINE AND GRADE.

WHEN IT IS IMPOSSIBLE TO OBTAIN PROPER HORIZONTAL AND VERTICAL SEPARATION AS STIPULATED ABOVE, ONE OF THE FOLLOWING METHODS SHALL BE REQUIRED:
A. THE SEWER SHALL BE DESIGNED AND CONSTRUCTED EQUAL TO WATER PIPE,
B. EITHER THE WATER MAIN OR THE SEWER LINE MAY BE ENCASED IN A WATERTIGHT CARRIER PIPE THAT EXTENDS 10 FEET ON BOTH SIDES OF THE CROSSING, MEASURED PERPENDICULAR TO THE WATER MAIN. THE CARRIER PIPE SHALL BE MADE OF MATERIALS APPROVED BY THE REGULATORY AGENCY FOR USE IN WATER MAIN CONSTRUCTION.

STREAM CROSSING REQUIREMENTS

THE CONTRACTOR SHALL CONSTRUCT STREAM CROSSINGS IN ACCORDANCE WITH THE PLANS, SPECIFICATION AND THE FOLLOWING CONSTRAINTS:

(1) DURING THE CONSTRUCTION OF THE CROSSING, NO MATERIAL MAY BE PLACED IN THE STREAM OR IN THE FLOOD PLAIN OF THE STREAM TO FORM CONSTRUCTION PADS, COFFER DAMS, ACCESS ROADS, ETC.,

(2) THE TRENCH SHALL BE BACKFILLED AS CLOSELY AS POSSIBLE TO THE ORIGINAL CONTOUR. ALL EXCESS MATERIAL FROM CONSTRUCTION OF THE TRENCH SHALL BE DISPOSED OF OUTSIDE OF THE FLOOD PLAIN.

(3) FOR SUBFLUVIAL CROSSINGS OF ERODIBLE CHANNELS, THERE SHALL BE AT LEAST THIRTY (30) INCHES CLEAR TO THE TOP OF THE PIPE OR CONDUIT AT ALL POINTS.

(4) FOR SUBFLUVIAL CROSSINGS OF NONERODIBLE CHANNELS, THERE SHALL BE AT LEAST SIX (6) INCHES OF CLEAR COVER ABOVE THE TOP OF THE PIPE OR CONDUIT AT ALL POINTS, AND THE PIPE OR CONDUIT SHALL BE ENCASED ON ALL SIDES BY AT LEAST SIX (6) INCHES OF CONCRETE.

UTILITY NOTES

1. **UTILITY CONTACTS:**

   Corbin City Utilies
   1515 Cumberland Falls Highland
   Corbin, Kentucky 40701
   Contact: Ron Herd
   606-528-4848

   Kentucky Utilities Company
   180 Substation Street
   London, Kentucky
   Contact: David Laun
   606-309-1923

2. CONTRACTOR SHALL NOTIFY APPROPRIATE UTILITY AT LEAST 48 HOURS PRIOR TO BEGINNING CONSTRUCTION IN THE AREA OF THE AFFECTED UTILITY.
3. ANY INTERRUPTIONS IN SERVICE MUST BE MINIMIZED AND SCHEDULED WITH THE UTILITY.
4. ALL CASINGS FOR FUTURE USE MUST BE SEALED AND MARKED AT EACH END WITH A STEEL POST MIN. 6' LENGTH.
5. ALL PIPE MATERIALS, FITTINGS, ETC. MUST MEET THE APPROVAL OF THE APPLICABLE UTILITY.

Call 811 Before you Dig

INDEX MAP AND GENERAL NOTES

D. Scott Taylor
Digitally signed By D. Scott Taylor
Date: 2023.08.28 11:32:27 -04'00'

SOUTHERN KENYUCKY BUSINESS PARK
SANITARY SEWER EXTENSION TO LOTS 7 AND 8
CORBIN, KENTUCKY

REVISION	DATE	BY

© corrsoft
WORDS: This document & drawings subject matter considered confidential by Moses, Saddeler & Ellenbogen, Inc. and are protected by copyright laws. Unauthorized use of this document & drawings in whole or in part is prohibited. Any use by others is to indemnify Moses, Saddeler & Ellenbogen, Inc. and its officers, employees, consultants, considered therein, to defend, and to hold harmless Moses, Saddeler & Ellenbogen, Inc.

PROJECT NO.	
DESIGNED BY	D.S.T.
DRAWN BY	J.D.W
CHECKED BY	D.S.T.
REVIEWED BY	D.S.T.
DATE	AUGUST 2023
SCALE	AS NOTED

Engineers
Architects
Planners
MSE
OF KENTUCKY, INC.
624 Wellington Way
Lexington, KY 40503
www.msekec.com
Phone: (859)223-5694
Fax: (859)223-2607

DRAWING NO.
1
SHEET OF

M:\PROJECTS\SouthEast Sewer Extension\2022 SE sewer extension\Working\Corbin SE Sewer Extension 8-22-21.dwg 8/23/2023 4:51:18 PM, DWG To PDF.pc3

STA. 0+00
EXIST. MANHOLE
INV. ELEV. 1099.1
N54218.542
E31090.6857

121.981'
N 12° 10.55" W
69°38'17"
S39° 08' 58.28"E
290.335'
1105
1120
EXIST. 16" WATER LINE
30 LF CASING PIPE
64°33'35"
N76° 17' 26.76"E
155.585'
40°53'37"
N35° 23' 49.40"E
395.509'
53°39'
MH NO. 1
STA. 2+90.33
N53993.3871
E31273.9874
MH NO. 2
STA. 4+45.92
N54030.2598
E31425.1396
MH NO. 3
STA. 8+38.10
N54352.6619
E31654.2339
MH NO. 4
STA. 11+66.96
N54633.6455
E31818.6310
N30° 19' 51.74"E
325.543'
N58° 22' 35.86"E
415.803'
5 LF 8" STUB & PLUG
@ 0.50% SLOPE
MH NO. 5
STA. 15+64.98
N54842.346
E32157.541
0+00
1+00
2+00
3+00
4+00
5+00
6+00
7+00
8+00
9+00
10+00
11+00
12+00
13+00
14+00
15+00
15+64.98
50 25 0 50 100
SCALE: 1" = 50'

Sta 0+00.00
EXIST. MH
OUTLET ELEV = 1099.10
INLET ELEV = 1099.20
TOP ELEV 1105.30
286.33LF 8" PVC @ 0.499% SLOPE
Sta 2+90.33
MH NO. 1
TOP ELEV
1105.30
OUTLET INV 1100.63
INLET INV 1100.73
TOP ELEV
1108.30
Sta 4+45.92
MH NO. 2
151.59 LF 8" PVC @
0.50% SLOPE
OUTLET INV 1101.49
INLET INV 1101.59
EXIST. GROUND
388.18 LF 8" PVC @ 0.50% SLOPE
TOP ELEV
1107.9
Sta 8+38.10
MH NO. 3
OUTLET INV 1103.53
INLET INV 1103.63
324.86LF 8" PVC @ 2.23% SLOPE
TOP ELEV
1116.0
Sta 11+66.96
MH NO. 4
OUTLET ELEV = 1110.37
INLET ELEV = 1110.47
MATCHLINE
INSET "A"
Sta 13+50
394.02LF 8" P
1125
1120
1115
1110
12+00 12+50 13+00 13+50 14+00

CONTRACTOR IS TO EXPOSE EXISTING WATER LINE AT THIS LOCATION TO VERIFY DEPTH PRIOR TO STARTING CONSTRUCTION OF THE SEWER LINE

SEWER PROFILE

0+50 1+00 1+50 2+00 2+50 3+00 3+50 4+00 4+50 5+00 5+50 6+00 6+50 7+00 7+50 8+00 8+50 9+00 9+50 10+00 10+50 11+00 11+50 12

MATCHLINE
Sta 13+50
Sta 15+64.98
MH NO. 5
TOP ELEV
1121.0
1130
1125
1120
8" STUB
1115
1110
1105
394.02LF 8" PVC @ 1.015% SLOPE
OUTLET ELEV = 1114.47
INLET ELEV = 1114.57
INSET "A"
13+50 14+00 14+50 15+00 15+50 16+

SANITARY SEWER PLAN AND PROFILE

STATE OF KENTUCKY
D. SCOTT TAYLOR
LICENSED PROFESSIONAL ENGINEER
Digitally signed by D. Scott Taylor
Date: 2023.08.28 11:40:01 -04'00'
8/28/2023

SOUTHERN KENYUCKY BUSINESS PARK SANITARY SEWER EXTENSION TO LOTS 7 AND 8

CORBIN, KENTUCKY

DATE	REVISION	BY

© Omnigo
Engineered drawings created by MSE, of Kentucky, Inc. are instruments of service and shall remain the property of MSE, of Kentucky, Inc. The reuse of any drawing, in whole or in part, without the written permission of MSE, of Kentucky, Inc. is prohibited. Reuse includes, but is not limited to, the use of any drawing for other projects, additions to this project, or the completion of this project by others, unless MSE, of Kentucky, Inc. is employed for that purpose. Any unauthorized reuse will be at the user's sole risk and without liability to MSE, of Kentucky, Inc. The user shall indemnify and hold harmless MSE, of Kentucky, Inc. from all claims, damages, losses and expenses including attorney's fees arising out of or resulting therefrom. Any such use by user or by anyone who obtains said drawings from user without the written permission of MSE, of Kentucky, Inc. shall be at user's sole risk and without liability to MSE, of Kentucky, Inc.

PROJECT NO.	COMET
DESIGNED BY	D.S.T.
DRAWN BY	J.D.W.
CHECKED BY	D.S.T.
REVIEWED BY	D.S.T.
DATE	AUGUST 2023
SCALE	AS NOTED

Engineers
Architects
Planners
MSE OF KENTUCKY, INC.
624 Wellington Way
Lexington, KY 40503
www.mselex.com
Phone (859)223-5694
Fax: (859)223-2607

DRAWING NO.
C-1
SHEET OF

M:\PROJECTS\Sunfield\Sewer Extension\2022 SE sewer extension\Working\Codes-SE_Sewer Extension-8-22-23.dwg, 8/23/2023 4:43:41 PM, DWG To PDF.pc3

SOFT-SANDY CLAY SOIL (BEARING STRENGTH = 2,000#/FT.²)											
PIPE SIZE	BEARING AREA 90° BEND		"B"	"A"	BEARING AREA 45° BEND		"B"	"A"	BEARING AREA TEE, GATE VALVE & DEAD END		"B"	"A"
1 1/2"	0.33	FT.²	12"	4"	0.18	FT.²	8"	4"	0.24	FT.²	9"	4"
2"	0.52	FT.²	12"	7"	0.28	FT.²	12"	4"	0.37	FT.²	12"	5"
2 1/2"	0.75	FT.²	12"	9"	0.41	FT.²	12"	5"	0.53	FT.²	12"	7"
3"	1.12	FT.²	18"	9"	0.61	FT.²	12"	8"	0.79	FT.²	18"	7"
4"	1.84	FT.²	24"	12"	1.00	FT.²	18"	8"	1.30	FT.²	24"	8"
6"	3.96	FT.²	36"	16"	2.14	FT.²	26"	12"	2.80	FT.²	30"	14"
8"	6.70	FT.²	54"	18"	3.63	FT.²	30"	18"	4.74	FT.²	36"	19"
10"	10.00	FT.²	60"	24"	5.41	FT.²	44"	18"	7.07	FT.²	43"	24"
12"	13.69	FT.²	60"	33"	7.41	FT.²	36"	30"	9.68	FT.²	47"	30"
14"	16.35	FT.²	66"	36"	9.35	FT.²	40"	34"	12.20	FT.²	60"	30"
16"	19.55	FT.²	72"	40"	11.35	FT.²	60"	28"	14.77	FT.²	60"	36"

THRUST BLOCKS
(160 P.S.I. DESIGNED)

NOTE: UNDER ROAD CROSSINGS STEEL CASING PIPE SHALL BE REQUIRED, PIPES 4" & LESS SHALL BE NEW SCHEDULE 40, PIPES LARGER THAN 4" SHALL HAVE MINIMUM WALL THICKNESS OF 0.250". ALL BORED & JACKED ENCASEMENT PIPE SHALL BE INSTALLED IN BORE HOLES NO LARGER THAN THE OUTSIDE DIAMETER OF THE ENCASEMENT PIPE.

NOTE: ALL JOINTS TO BE SOLIDLY WELDED, END OF CASING TO BE SEALED W/CONCRETE AFTER LINE HAS BEEN INSTALLED & TESTED.

* NOTE: OPEN TRENCH NO CLOSER THAN THE DITCH LINE FROM THE EDGE OF PAVEMENT.

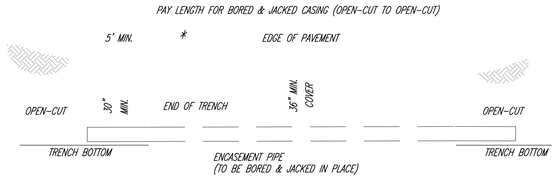

SECTION VIEW OF ROAD CROSSING
N.T.S.

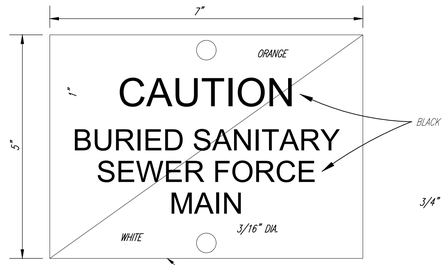

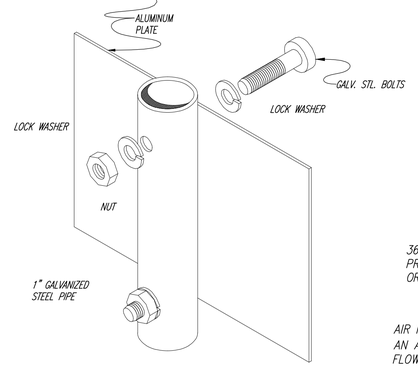

FORCE MAIN MARKER
N.T.S. (MSD-10)

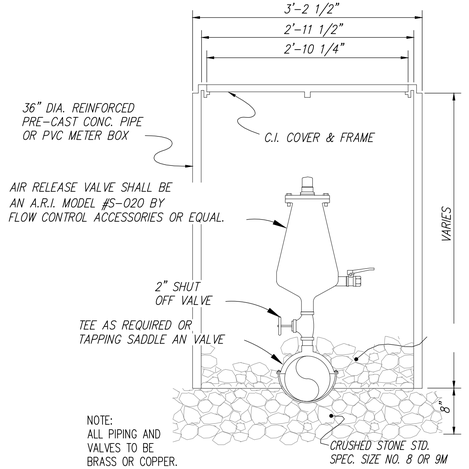

AIR RELEASE AND VACUUM RELEASE VALVE AND BOX DETAIL
N.T.S.

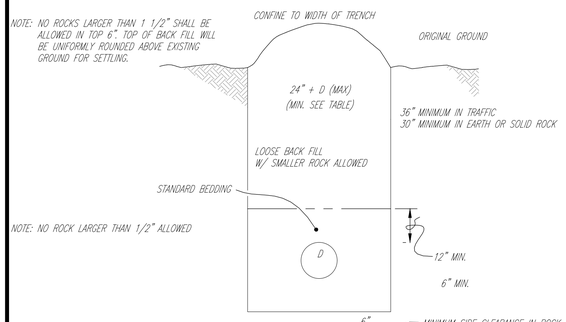

TRENCH WIDTH & DEPTH
N.T.S. (PST-04)

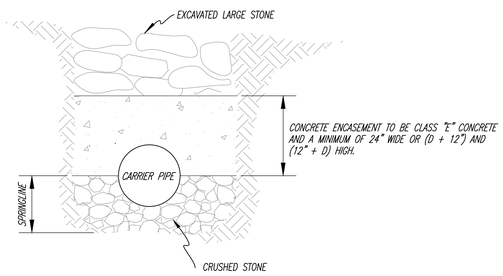

SPECIAL CREEK CROSSING TYPE "B" IN LOSE ROCK
N.T.S.

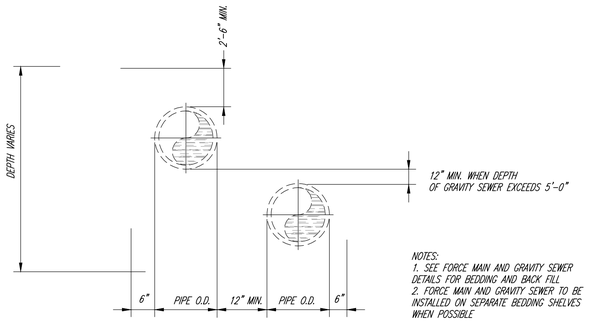

NOTES:
1. SEE FORCE MAIN AND GRAVITY SEWER DETAILS FOR BEDDING AND BACK FILL
2. FORCE MAIN AND GRAVITY SEWER TO BE INSTALLED ON SEPARATE BEDDING SHELVES WHEN POSSIBLE

COMBINED TRENCH
N.T.S.

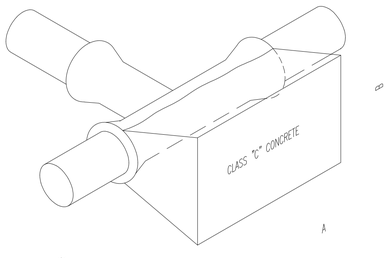

NOTE: ALL THRUST BLOCKS SHALL BE CONSTRUCTED OF CLASS "C" CONCRETE.

THRUST BLOCK FOR TEE
N.T.S.

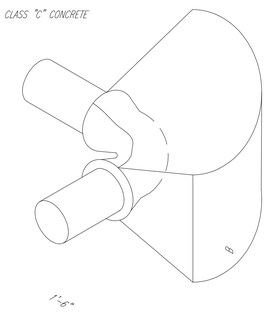

NOTE: 1"x4" STEEL STRAP ANCHORED WITH 1/2" ROD, ALL COATED W/ BITUMASTIC SHALL BE CONSIDER EQUAL TO A PAIR OF #4 BARS FOR USE W/ THRUST BLOCKS.

THRUST BLOCK FOR HORIZONTAL 90° BEND
N.T.S.

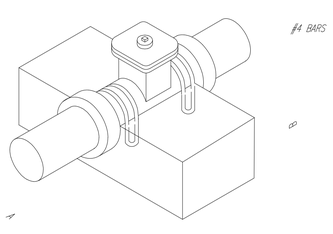

NOTE: APPLY KOPPERS BITUMASTIC #50 TO ALL BARS OR STRAPS USED W/ THRUST BLOCKS

THRUST BLOCK FOR GATE VALVE
N.T.S.

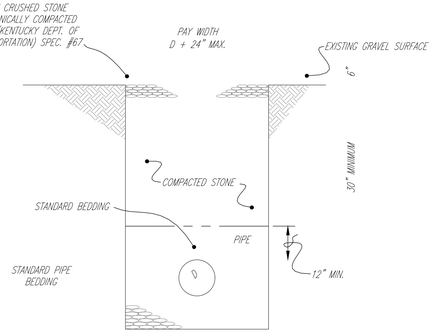

GRAVEL SURFACE
N.T.S. (PST-06)

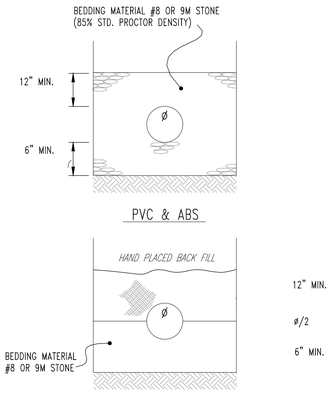

TRENCHING, BEDDING, & BACK FILL DETAILS
N.T.S. (BDS-10)

STANDARD SEWER DETAILS

D. Scott Taylor
Digitally signed by D. Scott Taylor
Date: 2023.09.28 11:40:54 -04'00'
8/28/2023

SOUTHERN KENYUCKY BUSINESS PARK
SANITARY SEWER EXTENSION TO LOTS 7 AND 8
CORBIN, KENTUCKY

REVISION	DATE	BY

NOTICE: This document & Ideas subject matter constituent confidential by Mises, Goldsmith & Ehrenedge, Inc. and can not be used for any purpose other than that specifically authorized by MSE. Any use, duplication, or reproduction by any party other than MSE, in whole or in part, is prohibited. Any unauthorized use, duplication, or reproduction, contained herein to others, or to any unauthorized purpose, is strictly prohibited.
© COPYRIGHT

PROJECT NO.	
DESIGNED BY	D.S.T.
DRAWN BY	J.D.W.
CHECKED BY	D.S.T.
REVIEWED BY	D.S.T.
DATE	AUGUST 2023
SCALE	AS NOTED

Engineers
Architects
Planners
MSE
OF KENTUCKY, INC.
624 Wellington Way
Lexington, KY 40503
www.msekent.com
Phone: (859)223-5684
Fax: (859)223-2607

DRAWING NO.
SD-1
SHEET OF

M:\PROJECTS\Southfast Sewer Extension\2022 SE sewer extension\Working\Cadkn-SE Sewer Extension-8-22-23.dwg 8/21/2023 4:45:14 PM, DWG To PDF.pc3

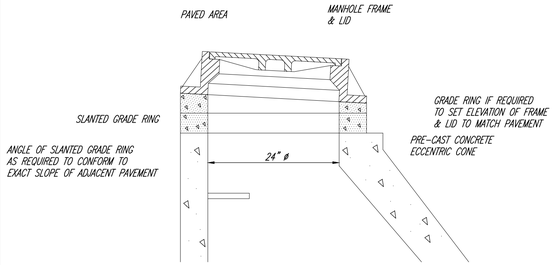

NOTE: INSTALL SEALING COMPOUND IN ALL JOINTS TO INCLUDE BENEATH FRAME.

DETAIL – GRADE RINGS

N.T.S. (GCS-05)

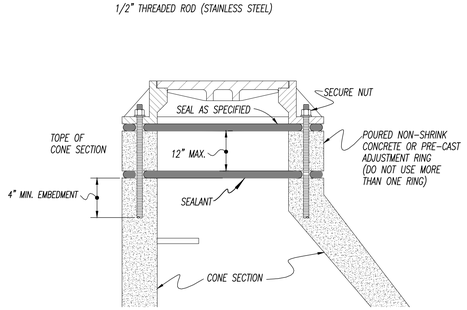

DETAIL: SANITARY SEWER INSTALLATION DETAIL FOR ALL FRAMES AND COVERS

N.T.S.

NOTE:
MIN. WT. LID ~ 150 lbs.
MIN. WT. LID/FRAME ASSY. ~ 385 lbs.
ALL STEEL ASTM A-48 W/ MACHINED SEATING EDGES

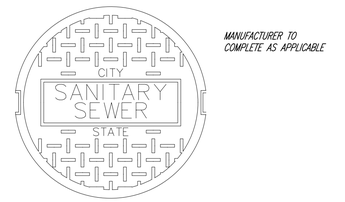

PLAN – LID

N.T.S.

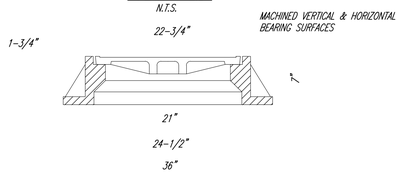

SECTION – MANHOLE & LID

N.T.S. (GCS-06)

GASKET: THICKNESS OF GASKET MATERIAL .375
TENSILE STRENGTH OF RUBBER 1800 PSI MIN.
ELONGATION OF RUBBER 450% – 550%
DUROMETER OF RUBBER 42 ±5

ALL RUBBER MEETS ASTM C-923 REQUIREMENTS.

POWER EXPANSION SLEEVE: 1.5" X .120" TYPE 304 STAINLESS STEEL
TENSILE STRENGTH OF STEEL 85,000 PSI
YIELD STRENGTH OF STEEL 35,000 PSI

POWER EXPANSION SLEEVE STAINLESS STEEL MEETS ALL REQUIREMENTS OF ASTM C-923

TAKE-UP CLAMP: BAND, SADDLE AND HOUSING MADE OF TYPE 302 STAINLESS STEEL
BREEZE CLAMP. SCREW MADE OF TYPE 305 STAINLESS STEEL.

BREEZE STAINLESS STEEL CLAMPS MEET ASTM C-923 REQUIREMENTS.

GASKET MANUFACTURED BY PRESS SEAL GASKET CO.

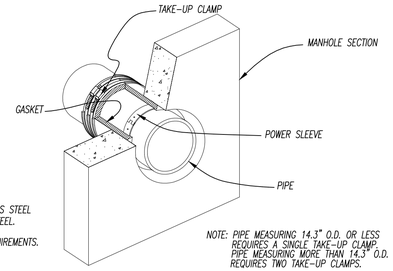

NOTE: PIPE MEASURING 14.3" O.D. OR LESS REQUIRES A SINGLE TAKE-UP CLAMP. PIPE MEASURING MORE THAN 14.3" O.D. REQUIRES TWO TAKE-UP CLAMPS.

FORCE MAIN/MANHOLE TIE-IN

NTS (SCS3)

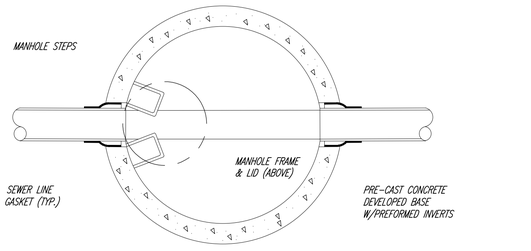

PLAN

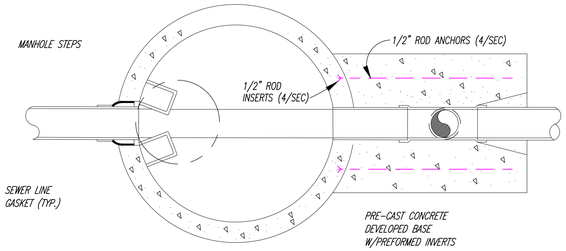

PLAN

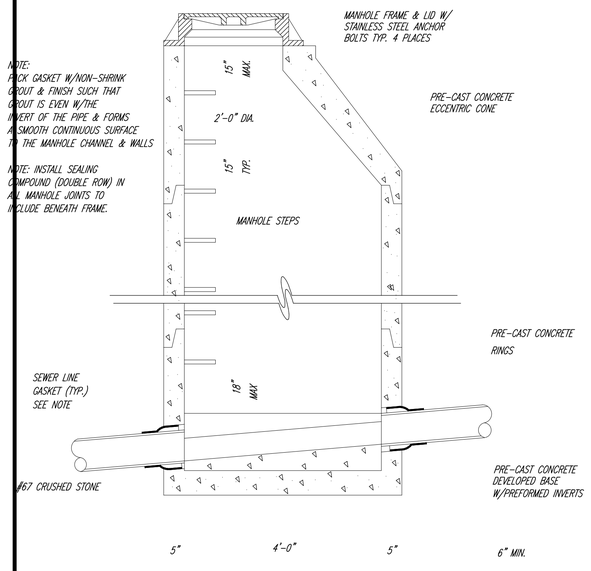

SECTION

TYPICAL MANHOLE

N.T.S. (GCS-02)

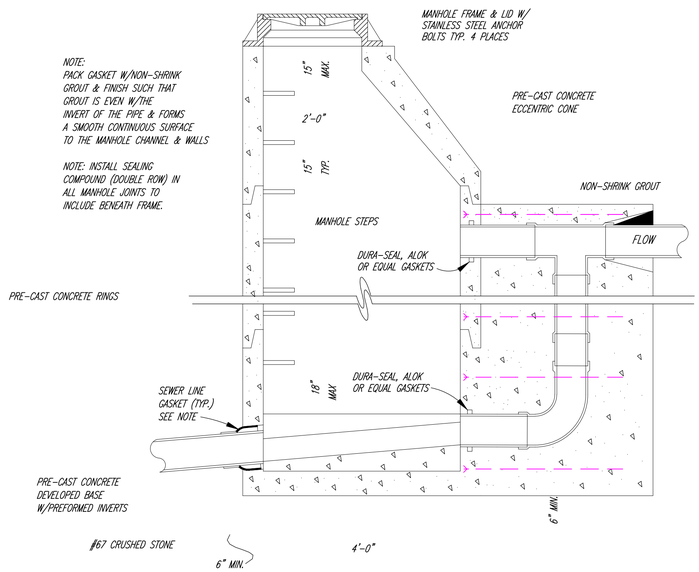

SECTION

TYPICAL DROP-MANHOLE

N.T.S. (GCS-03)

STANDARD SEWER DETAILS

D. Scott Taylor
Digitally signed by D. Scott Taylor
Date: 2023.08.28 11:48:23 -04'00'
4/28/2023

SOUTHERN KENYUCKY BUSINESS PARK
SANITARY SEWER EXTENSION TO LOTS 7 AND 8
CORBIN, KENTUCKY

DATE	REVISION	BY

© COPYRIGHT
NOTICE: This document discloses subject matter considered confidential by Mayes, Sudderth & Etheredge, Inc. and an unpublished work protected by the copyright laws of the United States. It may not be disclosed to others, or used in any way by anyone other than Mayes, Sudderth & Etheredge, Inc. without the express written permission of Mayes, Sudderth & Etheredge, Inc., published hereon, or to others, or to

PROJECT NO.	
DESIGNED BY	D.S.T.
DRAWN BY	J.D.W.
CHECKED BY	D.S.T.
REVIEWED BY	D.S.T.
DATE	AUGUST 2023
SCALE	AS NOTED

Engineers
Architects
Planners
MSE
OF KENTUCKY, INC.
624 Wellington Way
Lexington, KY 40503
www.msekx.com
Phone: (859)223-5684
Fax: (859)229-2807

DRAWING NO.
SD-2
SHEET OF

M:\PROJECTS\Southern Sewer Extension\2022 SK sewer extension\Working\Corbin-SE_Sewer Extension-8-22-23.dwg 8/23/2023 4:48:31 PM, DWG To PDF.pc3

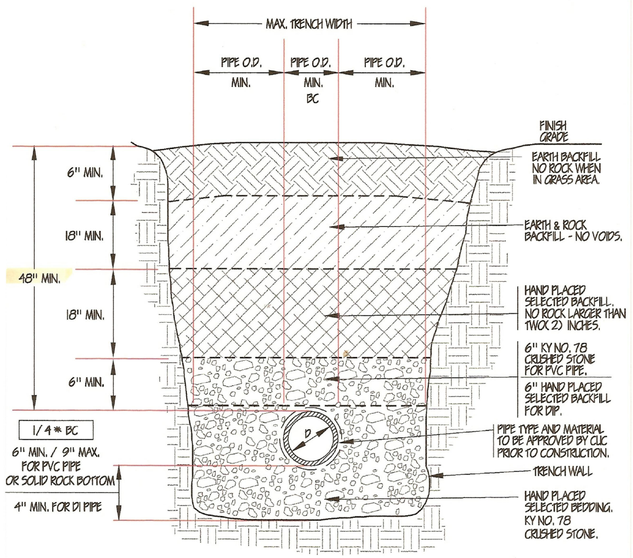

TYPICAL PVC/DI GRAVITY SEWER PIPE BEDDING AND BACKFILL FOR SEWERLINE INSTALLATION ON STABLE SOIL OR SOLID ROCK DETAIL

NOTES:

1. IN THE CASE OF OPEN-CUT CROSSING OF CITY, COUNTY, OR STATE ROADS, THE ENTIRE TRENCH SHALL BE BACKFILLED WITH KY NO. 78 CRUSHED STONE.
2. IF TRENCH BOTTOM IS SOLID ROCK, 6" MIN. OF HAND PLACED SELECTED PIPE BEDDING SHALL BE INSTALLED.

CITY UTILITIES COMMISSION
901 SOUTH MAIN STREET
CORBIN, KY. 40701

TYPICAL PVC/DI GRAVITY SEWERLINE BEDDING AND BACKFILL FOR SEWERLINE INSTALLATION ON STABLE SOIL OR SOLID ROCK DETAIL

SEWER DETAIL NO. 33

SCALE:	NONE
FILE NAME:	SE DETAIL 33
DATE:	10-86
DATE REVISED:	5-97
DRAWN BY:	J.W.N.
APPROVED BY:	G.P.R.
SHEET NO.:	1 OF 1

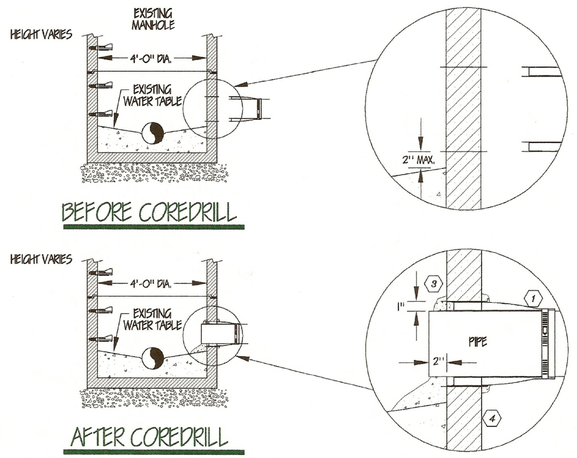

NOTES:

1. WATERTIGHT NEOPRENE BOOTS SHALL BE "KOR-N-SEAL" AS MANUFACTURED BY NATIONAL POLLUTION CONTROL SYSTEMS INC. OR APPROVED EQUAL.
2. COREDRILL HOLE THROUGH MANHOLE WALL TO EXACT DIAMETER RECOMMENDED BY THE MANFACTURER OF THE NEOPRENE BOOT; NAMELY, NATIONAL POLLUTION CONTROL SYSTEMS INC. AND JACK BOOT INTO PLACE.
3. GROUT COREHOLE AND PIPE INSIDE AND OUTSIDE OF MANHOLE.
4. COAT DISTURBED AREAS ON EXTERIOR WALLS OF MANHOLE WITH A BITUMINOUS FOUNDATION COATING AND ALLOW TO DRY 24 HRS. BEFORE BACKFILLING.

CITY UTILITIES COMMISSION
901 SOUTH MAIN STREET
CORBIN, KY. 40701

TYPICAL PIPE INSTALLATION INTO EXISTING MANHOLE DETAIL

SEWER DETAIL NO. 30

SCALE:	NONE
FILE NAME:	SE DETAIL 30
DATE:	10-86
DATE REVISED:	5-97
DRAWN BY:	J.W.N.
APPROVED BY:	G.P.R.
SHEET NO.:	1 OF 1

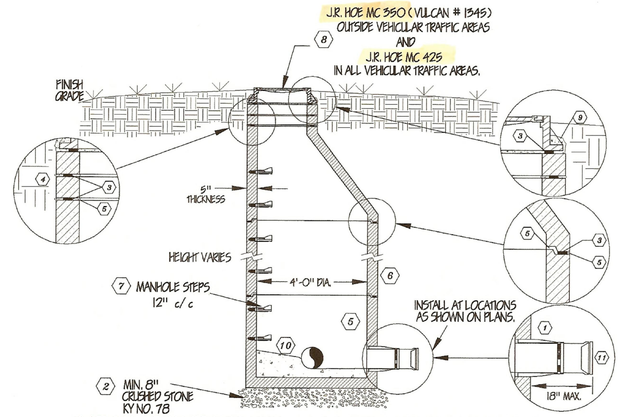

TYPICAL STANDARD PRE-CAST CONCRETE MANHOLE WITH STUB OUT DETAIL

NOTES:

1. WATERTIGHT NEOPRENE BOOTS SHALL BE "KOR-N-SEAL" AS MANUFACTURED BY NATIONAL POLLUTION CONTROL SYSTEMS INC. OR APPROVED EQUAL AT ALL INLET & OUTLET PIPES IN MANHOLE..
2. SET PRECAST MANHOLE ON KY NO. 78 CRUSHED STONE. MINIMUM OF 8 INCHES.
3. PLACE CONSEAL SEALANT OR "O" RINGS BETWEEN ALL JOINTS.
4. PLACE 2", 4" OR 6" CONCRETE MANHOLE GRADE RINGS AS REQUIRED (MAX 12").
5. GROUT JOINTS ON INTERIOR AND EXTERIOR OF MANHOLE BARREL SECTION.
6. COAT EXTERIOR WALLS OF MANHOLE INCLUDING FIELD GROUTED JOINTS WITH A BITUMINOUS FOUNDATION COATING AND ALLOW TO DRY 24 HRS. BEFORE BACKFILLING.
7. SEE CUC SEWER DETAIL - "TYPICAL PLASTIC MANHOLE STEP".
8. SEE CUC SEWER DETAIL - "TYPICAL MANHOLE FRAME & COVER".
9. SET FRAME IN MORTAR AND COAT WITH BITUMINOUS FOUNDATION COATING AND ALLOW TO DRY 24 HRS. BEFORE BACKFILLING.
10. FIELD GROUT WATER TABLE AND FLOW LINES TO INLET AND OUTLET OF ALL PIPES.
11. BELL & PLUG BY SAME MANUFACTURER.

CITY UTILITIES COMMISSION
901 SOUTH MAIN STREET
CORBIN, KY. 40701

TYPICAL STANDARD PRE-CAST CONCRETE MANHOLE WITH STUB OUT DETAIL

SEWER DETAIL NO. 3

SCALE:	NONE
FILE NAME:	SE DETAIL 3
DATE:	10-86
DATE REVISED:	5-97
DRAWN BY:	J.W.N.
APPROVED BY:	G.P.R.
SHEET NO.:	1 OF 1

C.U.C. - SEWER DETAILS

D. Scott Taylor
KENTUCKY LICENSED PROFESSIONAL ENGINEER
Digitally signed by D. Scott Taylor
Date: 2023.06.28 11:46:37 -04'00'

SOUTHERN KENYUCKY BUSINESS PARK
SANITARY SEWER EXTENSION TO LOTS 7 AND 8
CORBIN, KENTUCKY

REVISION	DATE	BY

© COPYRIGHT
NOTICE: This document discloses subject matter considered confidential by Myers, Sudderth & Etheridge, Inc. and on which Myers, Sudderth & Etheridge, Inc. has property rights. Neither receipt nor possession thereof confers or transfers any right to reproduce or to use any manufacture, design or process which may be covered thereby, or to use it for any purpose without the written permission of Myers, Sudderth & Etheridge, Inc.

PROJECT NO.	
DESIGNED BY	D.S.T.
DRAWN BY	J.D.W.
CHECKED BY	D.S.T.
REVIEWED BY	D.S.T.
DATE	AUGUST 2023
SCALE	AS NOTED

Engineers
Architects
Planners
MSE OF KENTUCKY, INC.
624 Wellington Way
Lexington, KY 40503
Phone: (859)223-5694
Fax: (859)223-2607
www.mselex.com

DRAWING NO.
SD-3
SHEET OF

M:\PROJECTS\Southern Sewer Extension\2023 SE sewer extension\Working\Corbin.dt_Sewer Extension-8-22-23.dwg 8/23/2023 4:47:08 PM, DWG To PDF.pc3